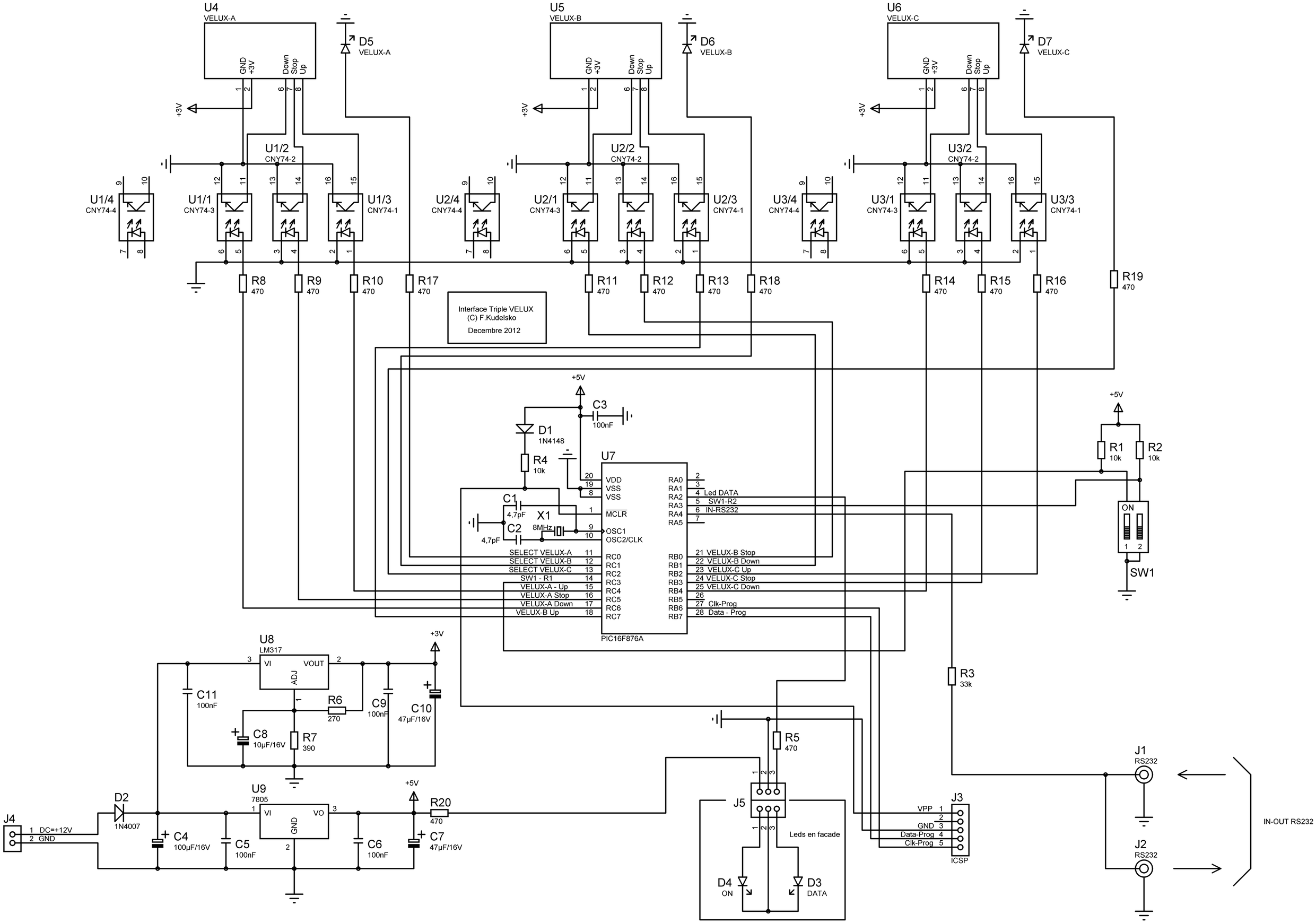
U4
VELUX-A
U5
VELUX-B
U6
VELUX-C
GND
+3V
Down
Stop
Up
D5
VELUX-A
D6
VELUX-B
D7
VELUX-C
+3V
U1/2
CNY74-2
U2/2
CNY74-2
U3/2
CNY74-2
U1/4
CNY74-4
U1/1
CNY74-3
U1/3
CNY74-1
U2/4
CNY74-4
U2/1
CNY74-3
U2/3
CNY74-1
U3/4
CNY74-4
U3/1
CNY74-3
U3/3
CNY74-1
R8
470
R9
470
R10
470
R17
470
R11
470
R12
470
R13
470
R18
470
R14
470
R15
470
R16
470
R19
470
Interface Triple VELUX
(C) F.Kudelsko
Decembre 2012
+5V
C3
100nF
D1
1N4148
R4
10k
U7
C1
4,7pF
X1
8MHz
C2
4,7pF
VDD
VSS
VSS
MCLR
OSC1
OSC2/CLK
RA0
RA1
RA2
RA3
RA4
RA5
Led DATA
SW1-R2
IN-RS232
SELECT VELUX-A
SELECT VELUX-B
SELECT VELUX-C
SW1 - R1
VELUX-A - Up
VELUX-A Stop
VELUX-A Down
VELUX-B Up
RC0
RC1
RC2
RC3
RC4
RC5
RC6
RC7
RB0
RB1
RB2
RB3
RB4
RB5
RB6
RB7
VELUX-B Stop
VELUX-B Down
VELUX-C Up
VELUX-C Stop
VELUX-C Down
Clk-Prog
Data - Prog
PIC16F876A
+5V
R1
10k
R2
10k
ON
SW1
U8
LM317
VI
VOUT
ADJ
C11
100nF
R6
270
C9
100nF
C10
47µF/16V
C8
10µF/16V
R7
390
+3V
R3
33k
R5
470
J5
Leds en facade
D4
ON
D3
DATA
J1
RS232
J2
RS232
IN-OUT RS232
J3
VPP
GND
Data-Prog
Clk-Prog
ICSP
J4
DC=+12V
GND
D2
1N4007
U9
7805
VI
VO
GND
C4
100µF/16V
C5
100nF
C6
100nF
+5V
R20
470
C7
47µF/16V