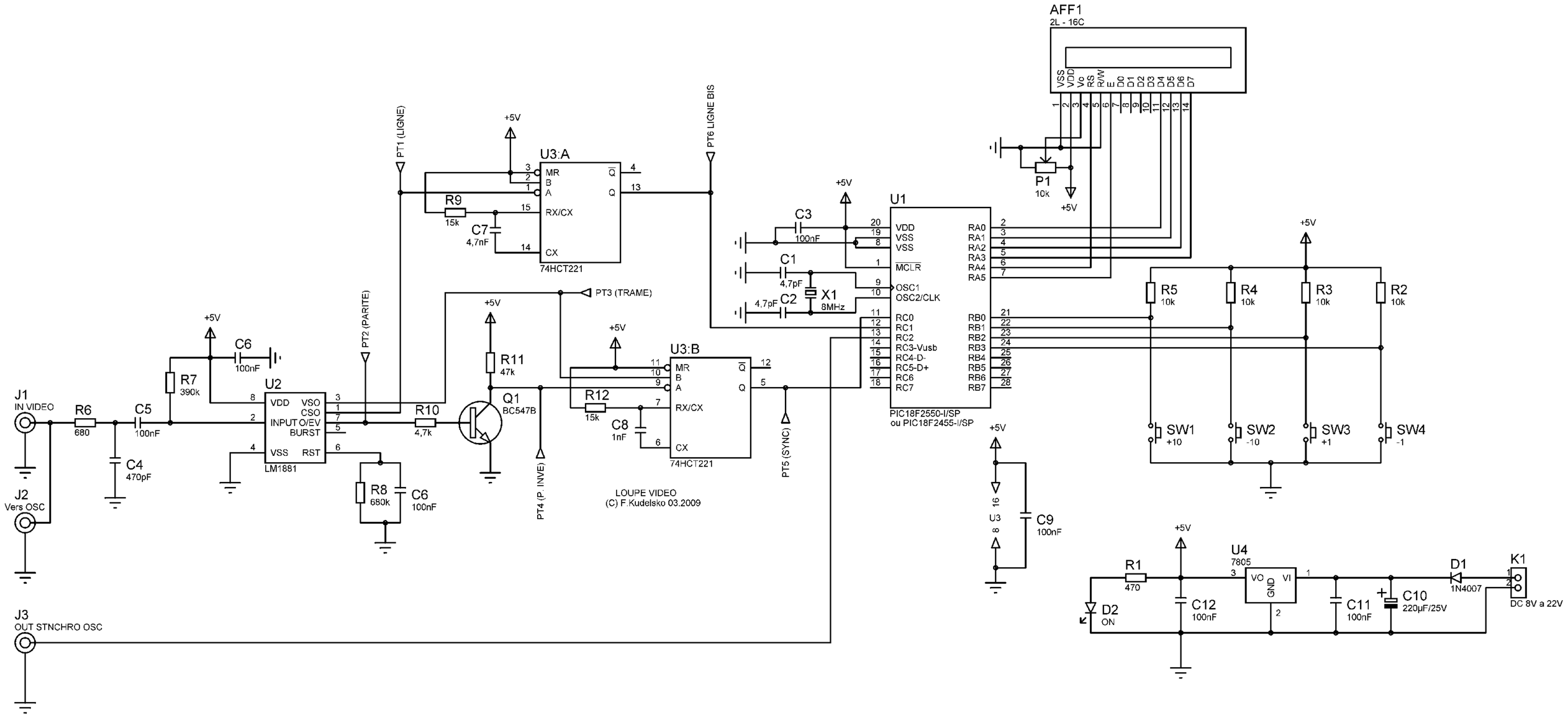
AFF1
2L - 16C
VSS VDD Vo RS R/W E D0 D1 D2 D3 D4 D5 D6 D7
P1
10k
+5V
U1
VDD
VSS
VSS
MCLR
OSC1
OSC2/CLK
RC0
RC1
RC2
RC3-Vusb
RC4-D-
RC5-D+
RC6
RC7
RA0
RA1
RA2
RA3
RA4
RA5
RB0
RB1
RB2
RB3
RB4
RB5
RB6
RB7
PIC18F2550-I/SP
ou PIC18F2455-I/SP
C3
100nF
C1
4,7pF
C2
4,7pF
X1
8MHz
R5
10k
R4
10k
R3
10k
R2
10k
SW1
+10
SW2
-10
SW3
+1
SW4
-1
U3:A
MR
B
A
RX/CX
CX
Q
74HCT221
R9
15k
C7
4,7nF
PT1 (LIGNE)
PT6 LIGNE BIS
PT3 (TRAME)
PT2 (PARITE)
PT4 (P. INVE)
PT5 (SYNC)
U3:B
74HCT221
R12
15k
C8
1nF
R11
47k
Q1
BC547B
R10
4,7k
R8
680k
C6
100nF
U2
VDD
VSO
CSO
INPUT
O/EV
BURST
VSS
RST
LM1881
R7
390k
C6
100nF
J1
IN VIDEO
R6
680
C5
100nF
C4
470pF
J2
Vers OSC
J3
OUT STNCHRO OSC
LOUPE VIDEO
(C) F.Kudelsko 03.2009
U3
16
8
C9
100nF
U4
7805
VO
GND
VI
R1
470
D2
ON
C12
100nF
C11
100nF
C10
220µF/25V
D1
1N4007
K1
DC 8V a 22V