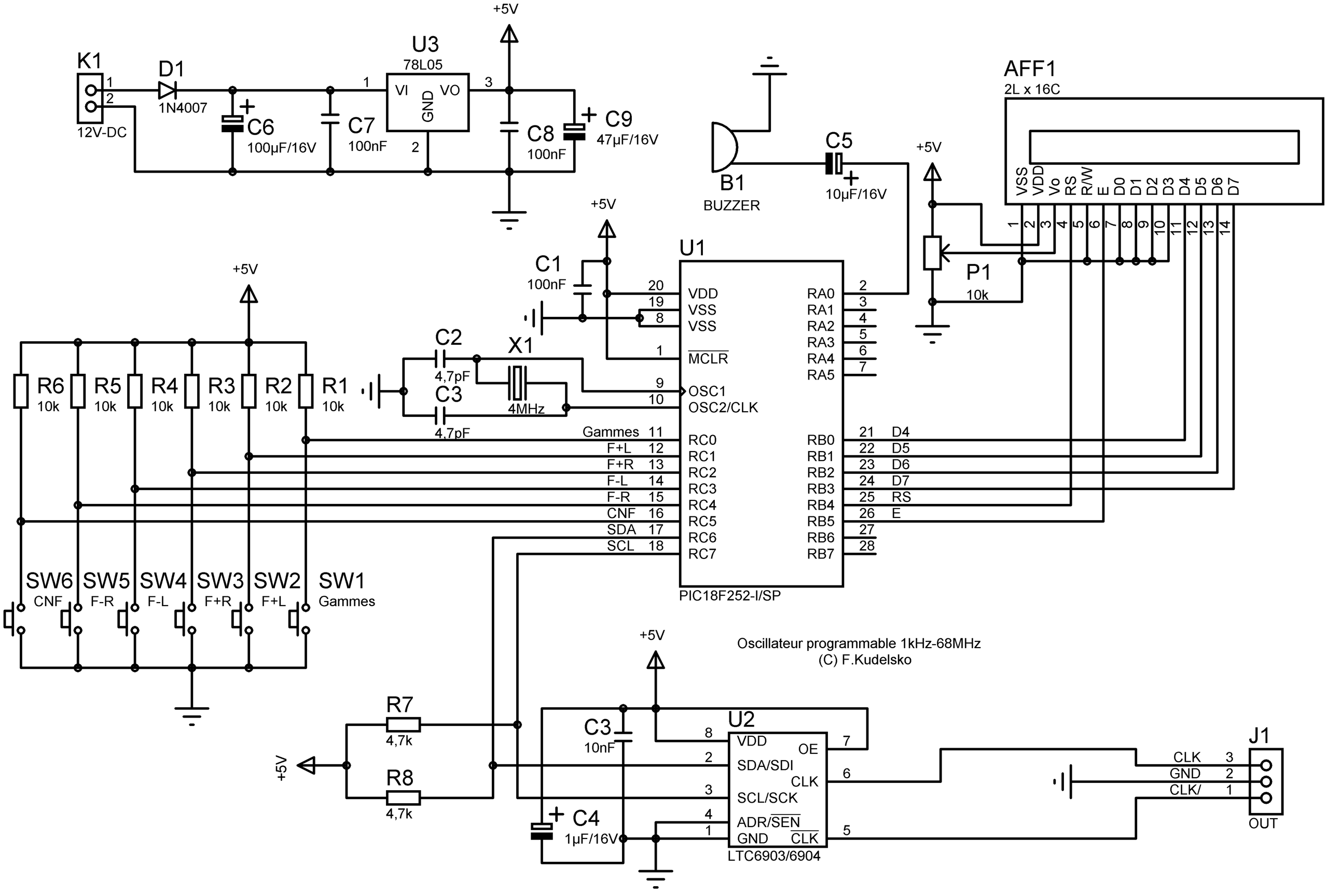
K1
12V-DC
D1
1N4007
C6
100µF/16V
C7
100nF
U3
78L05
VI
GND
VO
+5V
C8
100nF
C9
47µF/16V
B1
BUZZER
C5
10µF/16V
AFF1
2L x 16C
VSS VDD Vo RS R/W E D0 D1 D2 D3 D4 D5 D6 D7
P1
10k
C1
100nF
U1
VDD
VSS
VSS
MCLR
OSC1
OSC2/CLK
RC0 Gammes
RC1 F+L
RC2 F+R
RC3 F-L
RC4 F-R
RC5 CNF
RC6 SDA
RC7 SCL
RA0 RA1 RA2 RA3 RA4 RA5
RB0 D4
RB1 D5
RB2 D6
RB3 D7
RB4 RS
RB5 E
RB6
RB7
PIC18F252-I/SP
C2
4,7pF
X1
4MHz
C3
4,7pF
R6 R5 R4 R3 R2 R1
10k
SW6 CNF
SW5 F-R
SW4 F-L
SW3 F+R
SW2 F+L
SW1 Gammes
Oscillateur programmable 1kHz-68MHz
(C) F.Kudelsko
R7
4,7k
R8
4,7k
C3
10nF
C4
1µF/16V
U2
VDD
SDA/SDI
SCL/SCK
ADR/SEN
GND
OE
CLK
CLK
LTC6903/6904
J1
CLK
GND
CLK/
OUT